IoT LAb 2 : Co2 measurement with ESP32

Hanane.meliani@centralesupelec.fr

Material

ESP32 dev module https://joy-it.net/en/products/SBC-NodeMCU-ESP32

OR : TTGO-T1 : https://www.espboards.dev/esp32/ttgo-t1/

Sensair S8 sensor https://senseair.com/product/s8/

Leds + wires +100ohms resistors

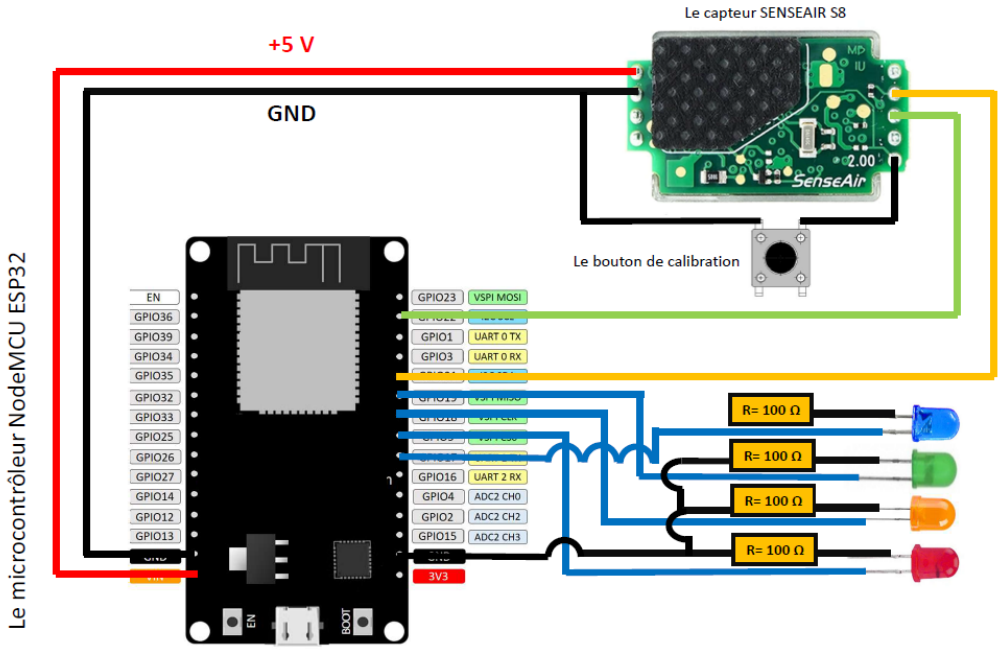

Figure 1 : USing esp32 devmodule

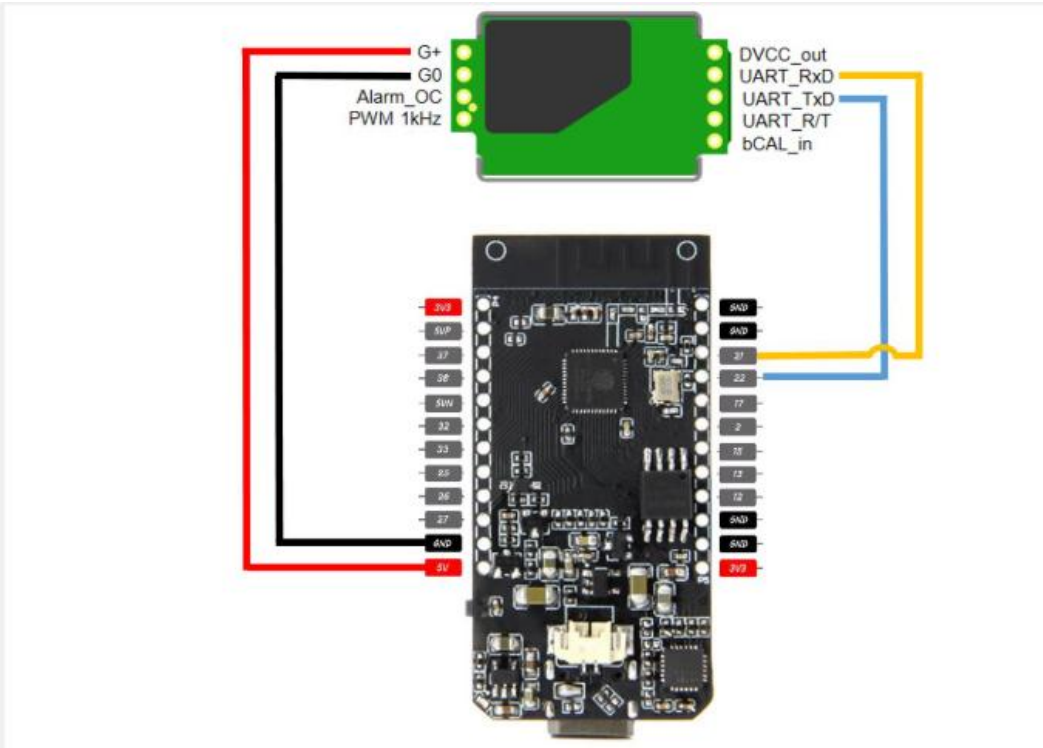

Figure 2 : using TTGO

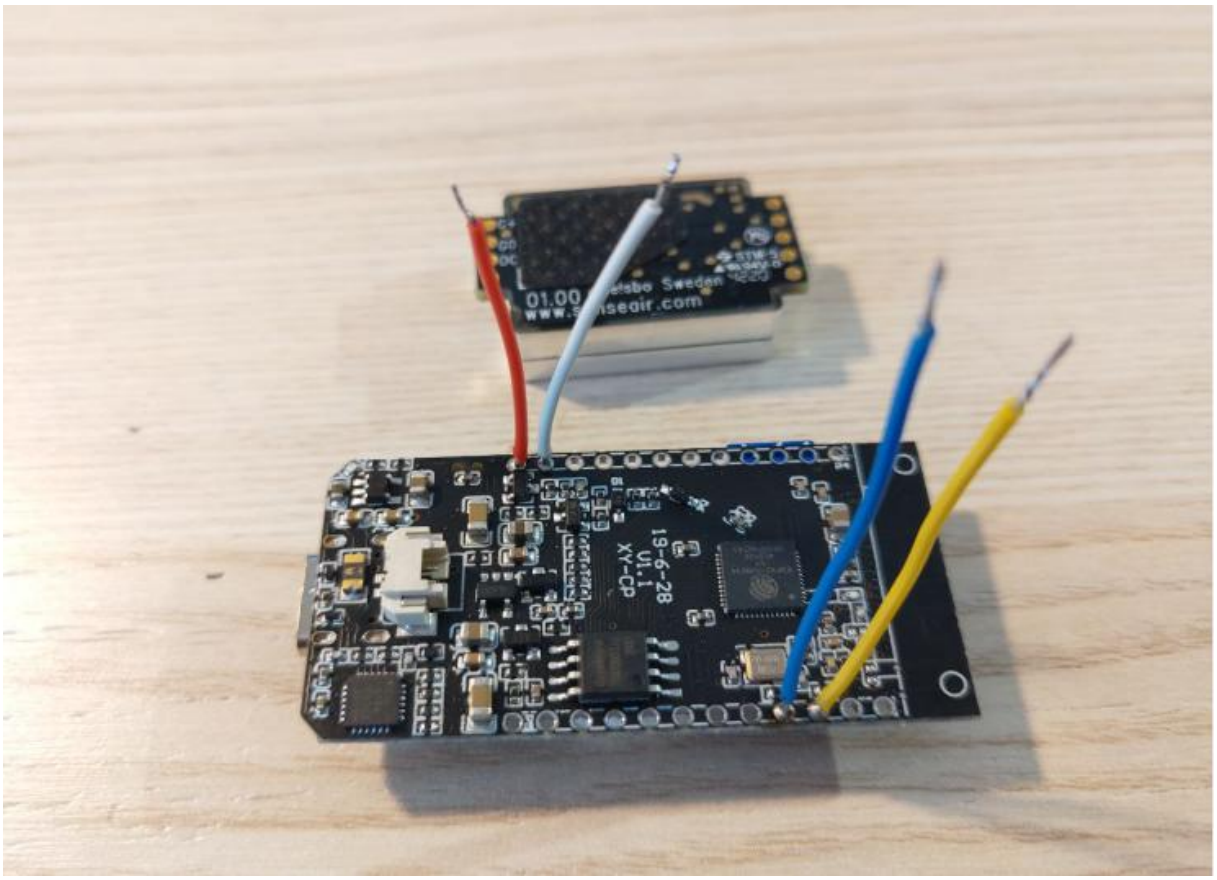

This project was developped in the project https://letsair.org/